TRUE PERIMETER – 57'–6"
SQFT SWIM AREA – 260
GALLONS – 7,750

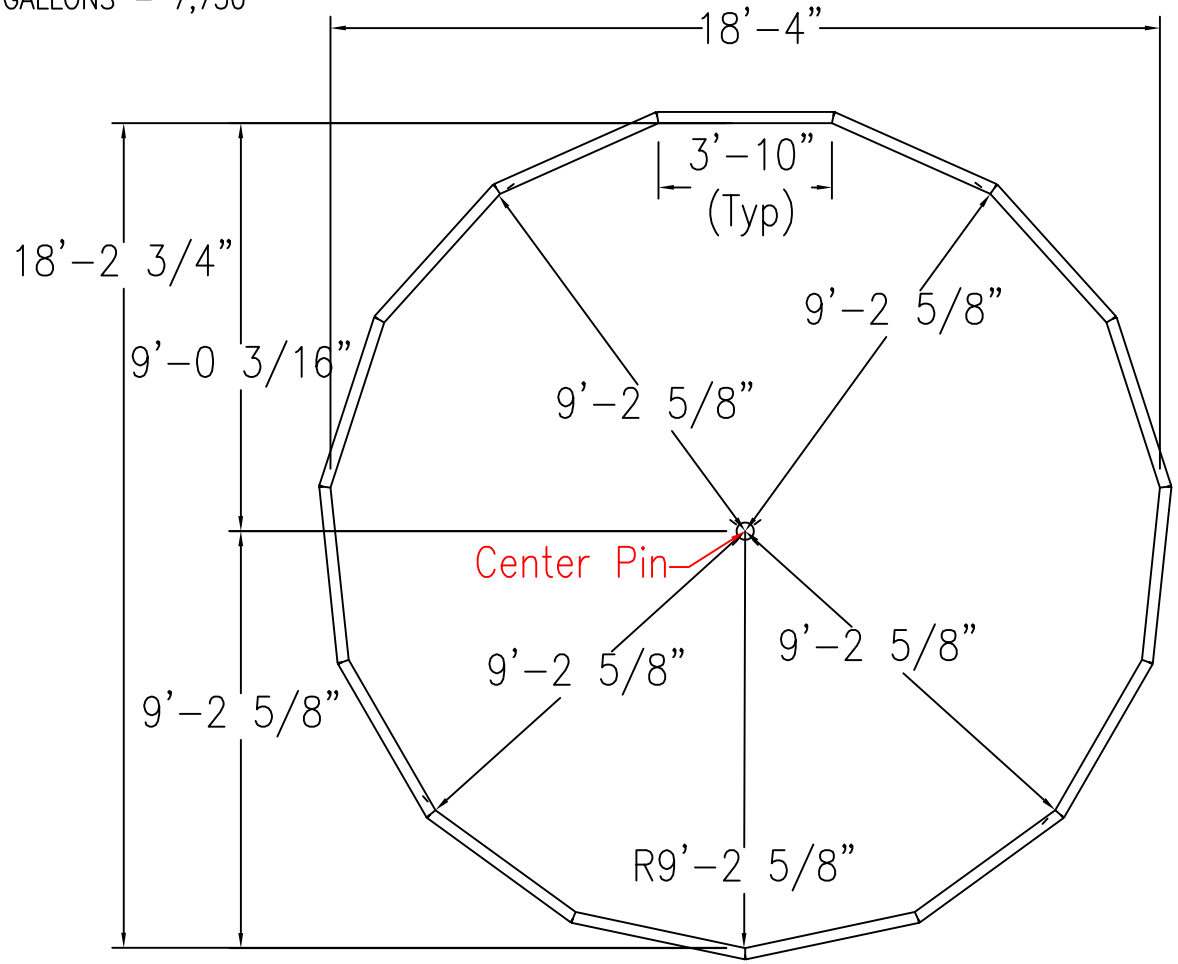

IF USING BENDABLE BULLNOSE COPING ADD 3–1/8" TO DIG DEPTH. BEAD TO FINISH WILL STAY THE SAME.

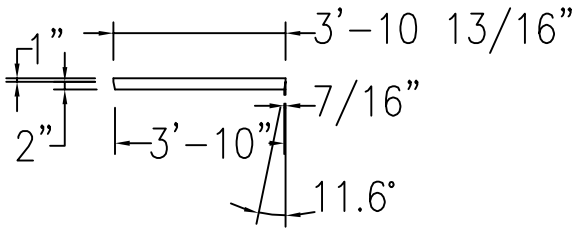

DRAWING MUST BE APPROVED AND SIGNED BEFORE ORDER WILL BE PLACED FOR ALL SPECIAL ORDERS.

DEALER_____
LINER CHOICE_____
DATE_____
CUSTOMER_____

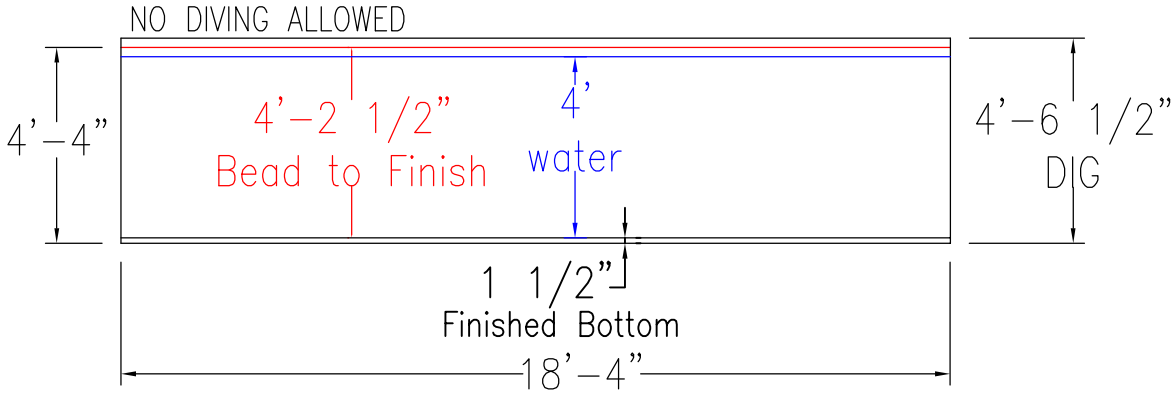

LNR PT# W2–118R
SNAP–IN CVR PT# W2–218
SOLAR CVR PT# W20–81

INSTALLATION TO BE IN ACCORDANCE WITH FOX POOL RECOMMENDATIONS

FOX POOL			
TITLE	18' ROUND ULTIMATE		
DATE	2/10/14	TYPE	0
DWG. NO.	02–1225	SCALE	NONE
DRW. BY.	J.LANDES		

©ALL RIGHTS RESERVED