TRUE PERIMETER = 65'-2"
SQFT SWIM AREA = 334
APPROX. GALLONS = 10,020

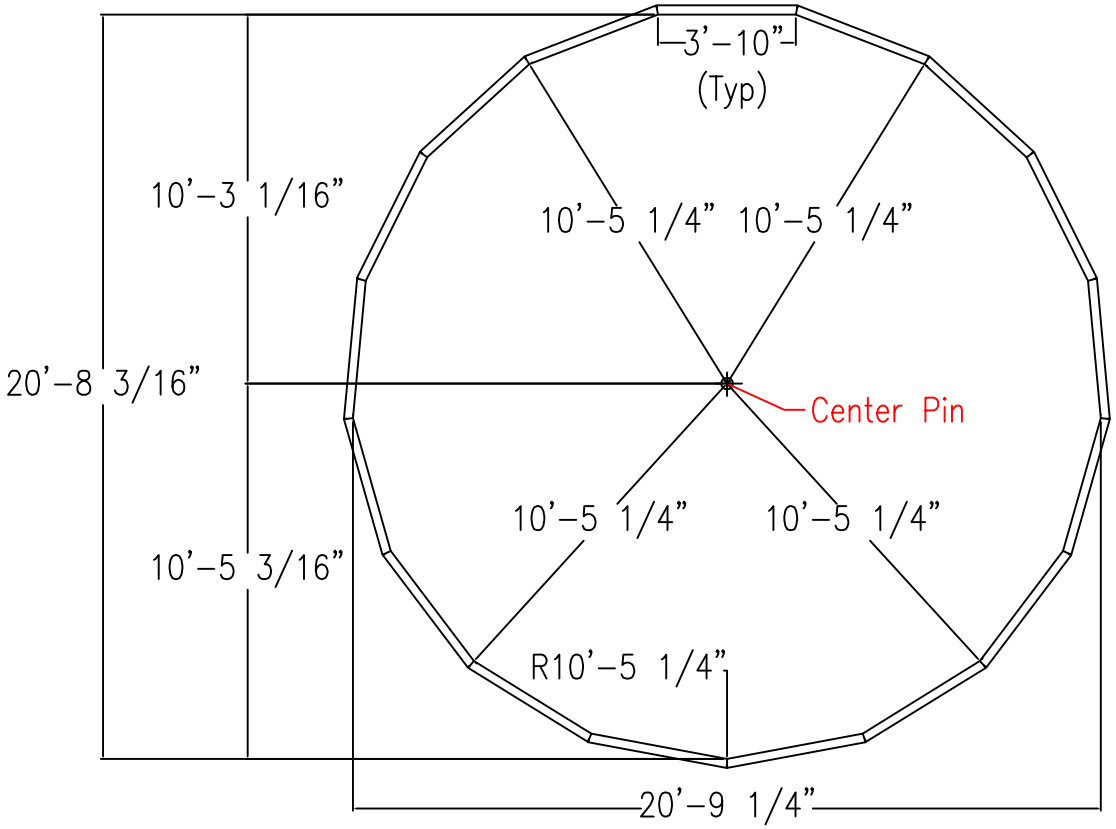

IF USING BENDABLE BULLNOSE COPING ADD 3-1/8" TO DIG DEPTH. BEAD TO FINISH WILL STAY THE SAME.

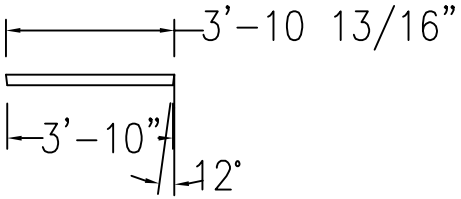

DRAWING MUST BE APPROVED AND SIGNED BEFORE ORDER WILL BE PLACED FOR ALL SPECIAL ORDERS.

DEALER_____
LINER CHOICE_____
DATE_____
CUSTOMER_____

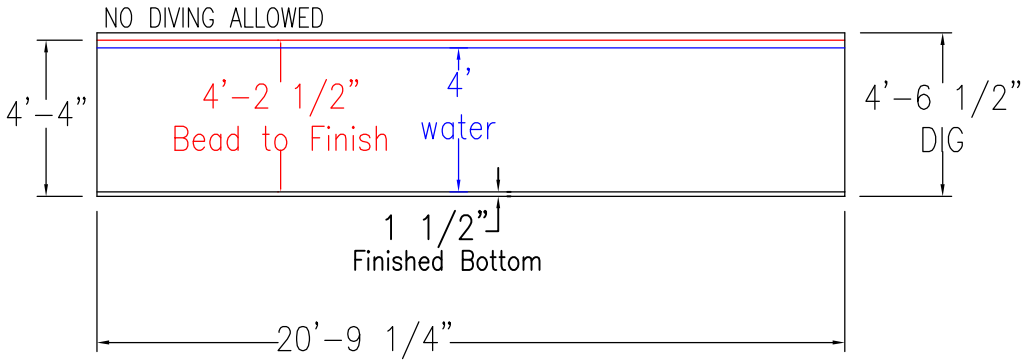

LNR PT# W2-121R
SNAP-IN CVR PT# W2-216
SOLAR CVR PT# W20-82

INSTALLATION TO BE IN ACCORDANCE WITH FOX POOL RECOMMENDATIONS

©ALL RIGHTS RESERVED

FOX POOL	
TITLE 21' ROUND ULTIMATE	
DATE 2/10/14	TYPE TYPE 0
DWG. NO. 02-1245	SCALE 1/8"=1'
DRW. BY. J.LANDES	