Pool Size: 12' X 30' X 12' X 22'
Pool Shape: TRUE ELL
Pool Number: PTR03355

250 Route 61 South, Schuylkill Haven, PA 17972 • 570-385-4733 • fax: 570-385-1318 • CustomerService@CardinalSystemsinc.com

Bill of Materials

PART NO.	QUANTITY	DESCRIPTION
"A" FRAME	12	"A" FRAME ASSEMBLY
5D42060084060	1	6" x 8 1/2" x 6"
CS902SA	3	90 DEG CORNER ANGLE
CS902SB	3	6" RAD CORNER FILLER "BIG VEE"
S1200SP34200XX4	1	12' POURED STEP W/LINER TRACK - SCREED EDGE - NEW STYLE
5S42052XXX0	2	5 1/4" Straight PANEL W/0 Z
5S42100XXX0	1	1' Straight PANEL W/0 Z
5S42200XXX0	3	2' Straight PANEL W/0 Z
5S42500XXX0	1	5' Straight PANEL W/0 Z
5S42600XXX1	1	6' Straight PANEL W/1 Z
5S42800RCN2	3	8' Straight PANEL W/2 Z WITH Return
5S42800WCN2	1	8' Straight PANEL W/2 Z WITH 1085 Skimmer
5S42800XXX2	4	8' Straight PANEL W/2 Z

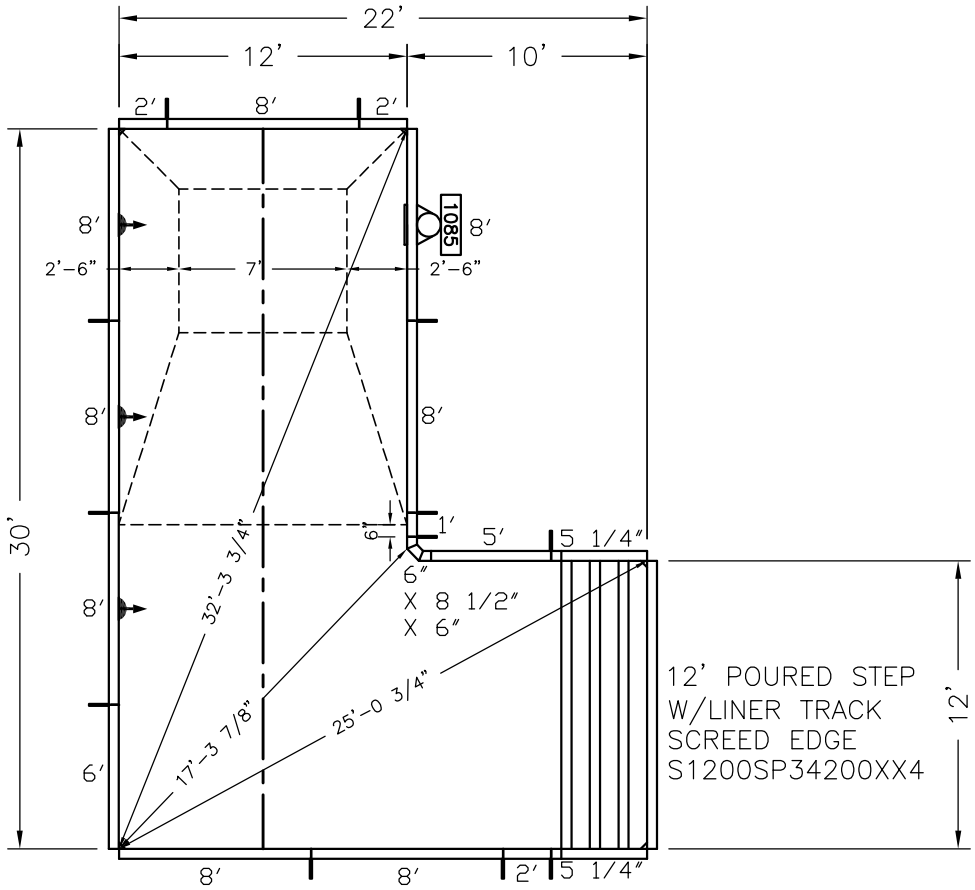

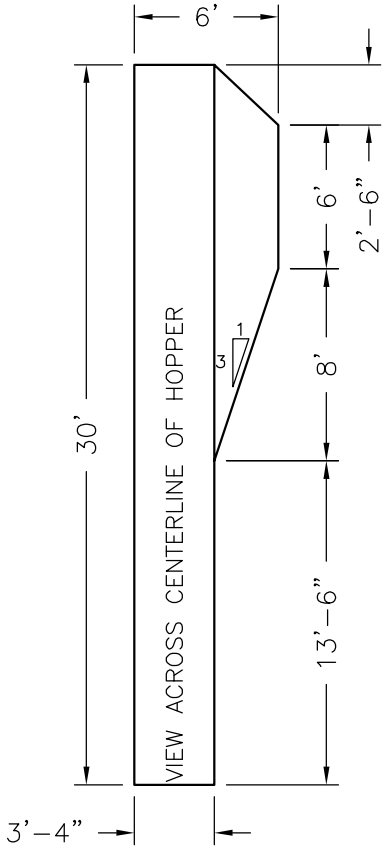

NOTE: THIS IS A NON DIVING POOL.

Date: 12/01/21	**Perimeter:** 103'-8 1/2"
Drawn By: JAY I.	**Area:** 480.1 SQ. FT.
Scale: 1/8" = 1'-0"	**Notes:** ----

CardinalSystemsInc.com

This information is the confidential property of Cardinal Systems, Inc. Disclosure or duplication without proper written approval is strictly prohibited. Acceptance and use of this drawing constitutes knowledge and acceptance by the user of the terms and conditions set forth in the notice and warning which accompanied this drawing is incorporated herein and made part hereof and is found on Cardinal Systems, Inc's website at www.CardinalSystemsInc.com