Pool Size: 16' X 36'
Pool Shape: RECTANGLE
Pool Number: PRT37838

250 Route 61 South, Schuylkill Haven, PA 17972 • 570-385-4733 • fax: 570-385-1318 • CustomerService@CardinalSystemsinc.com

Bill of Materials

PART NO.	QUANTITY	DESCRIPTION
"A" FRAME	18	"A" FRAME ASSEMBLY
5C42315XX02000	4	2' RADIUS CORNER
5S42200XXX0	4	2' Straight PANEL W/0 Z
5S42800RCN2	3	8' Straight PANEL W/2 Z WITH Return
5S42800WCN2	2	8' Straight PANEL W/2 Z WITH 1085 Skimmer
5S42800XXX2	4	8' Straight PANEL W/2 Z

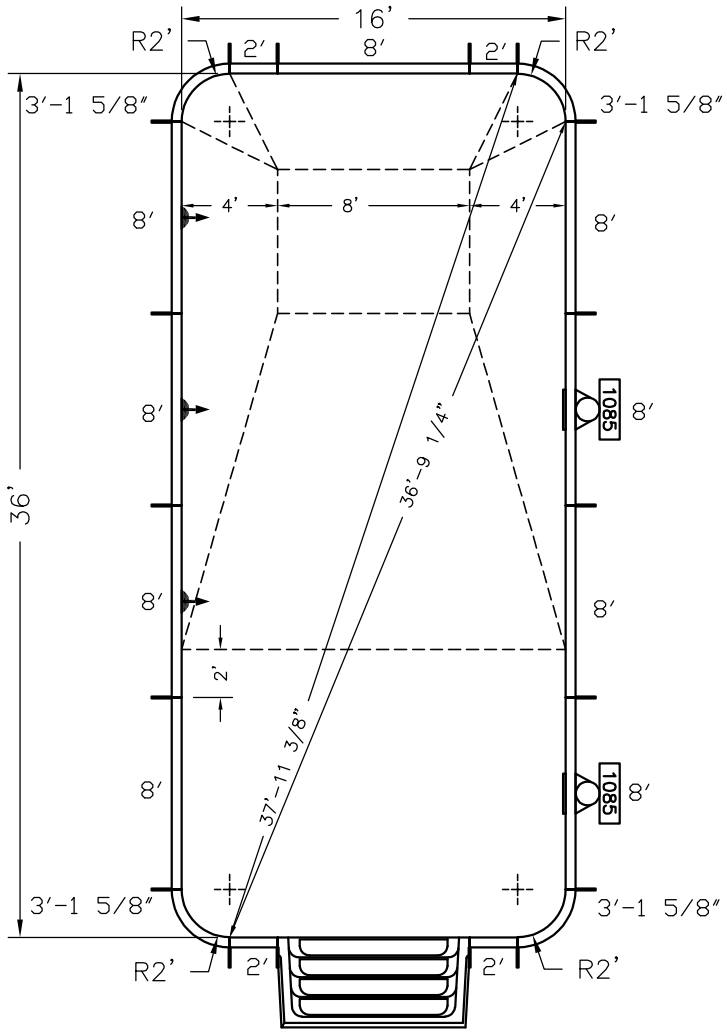

8' PLASTIC STEP

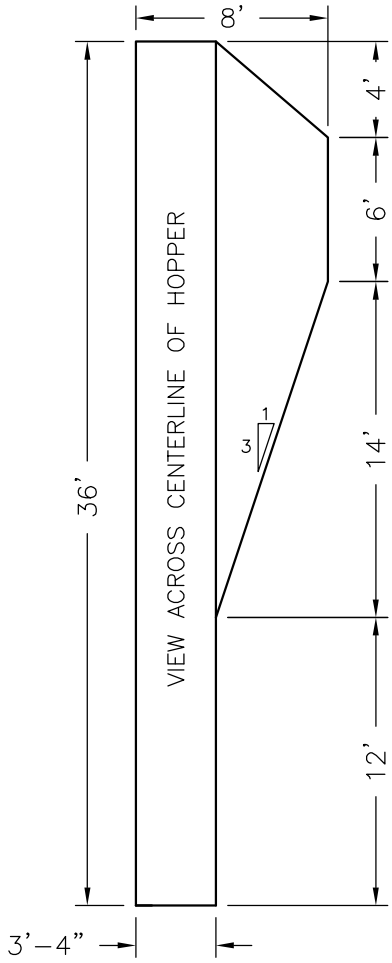

Date: 01/16/23	**Perimeter:** 100'-6 3/4"
Drawn By: JAY I.	**Area:** 572.6 SQ. FT.
Scale: 1/8" = 1'-0"	**Notes:** ----

CardinalSystemsInc.com

This information is the confidential property of Cardinal Systems, Inc. Disclosure or duplication without proper written approval is strictly prohibited. Acceptance and use of this drawing constitutes knowledge and acceptance by the user of the terms and conditions set forth in the notice and warning which accompanied this drawing is incorporated herein and made part hereof and is found on Cardinal Systems, Inc's website at www.CardinalSystemsInc.com