Pool Size: 18' X 37'
Pool Shape: GRECIAN
Pool Number: PGR02038

250 Route 61 South, Schuylkill Haven, PA 17972 • 570-385-4733 • fax: 570-385-1318 • CustomerService@CardinalSystemsinc.com

Bill of Materials

PART NO.	QUANTITY	DESCRIPTION
"A" FRAME	10	"A" FRAME ASSEMBLY
CS901GC	8	GRECIAN CORNER ANGLE
5S42090XXX0	2	9" Straight PANEL W/0 Z
5S42190XXX0	2	1'-9" Straight PANEL W/0 Z
5S42460XXX0	2	4'-6" Straight PANEL W/0 Z
5S42600XXX1	4	6' Straight PANEL W/1 Z
5S42800RCN2	3	8' Straight PANEL W/2 Z WITH Return
5S42800WCN2	2	8' Straight PANEL W/2 Z WITH 1085 Skimmer
5S42800XXX2	2	8' Straight PANEL W/2 Z

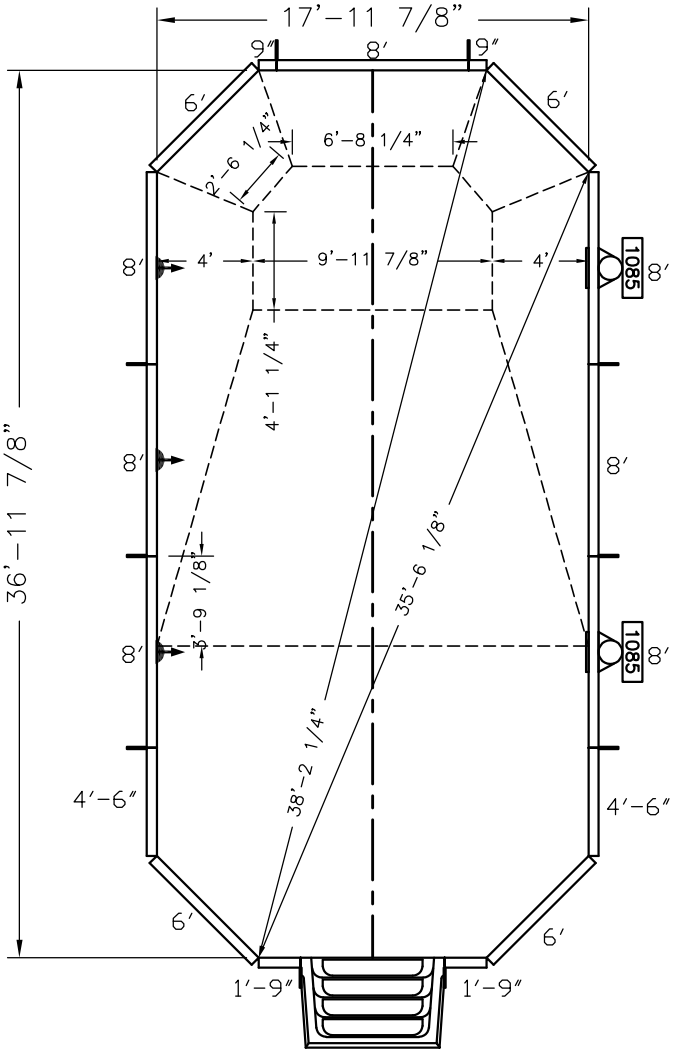

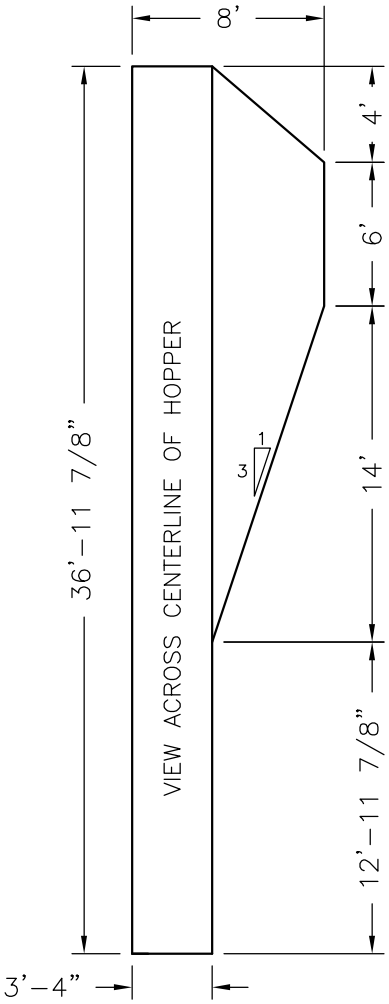

Date: 01/16/23	**Perimeter:** 100'-0"
Drawn By: JAY I.	**Area:** 629.2 SQ. FT.
Scale: 1/8" = 1'-0"	**Notes:** ----

CardinalSystemsInc.com

This information is the confidential property of Cardinal Systems, Inc. Disclosure or duplication without proper written approval is strictly prohibited. Acceptance and use of this drawing constitutes knowledge and acceptance by the user of the terms and conditions set forth in the notice and warning which accompanied this drawing is incorporated herein and made part hereof and is found on Cardinal Systems, Inc's website at www.CardinalSystemsInc.com